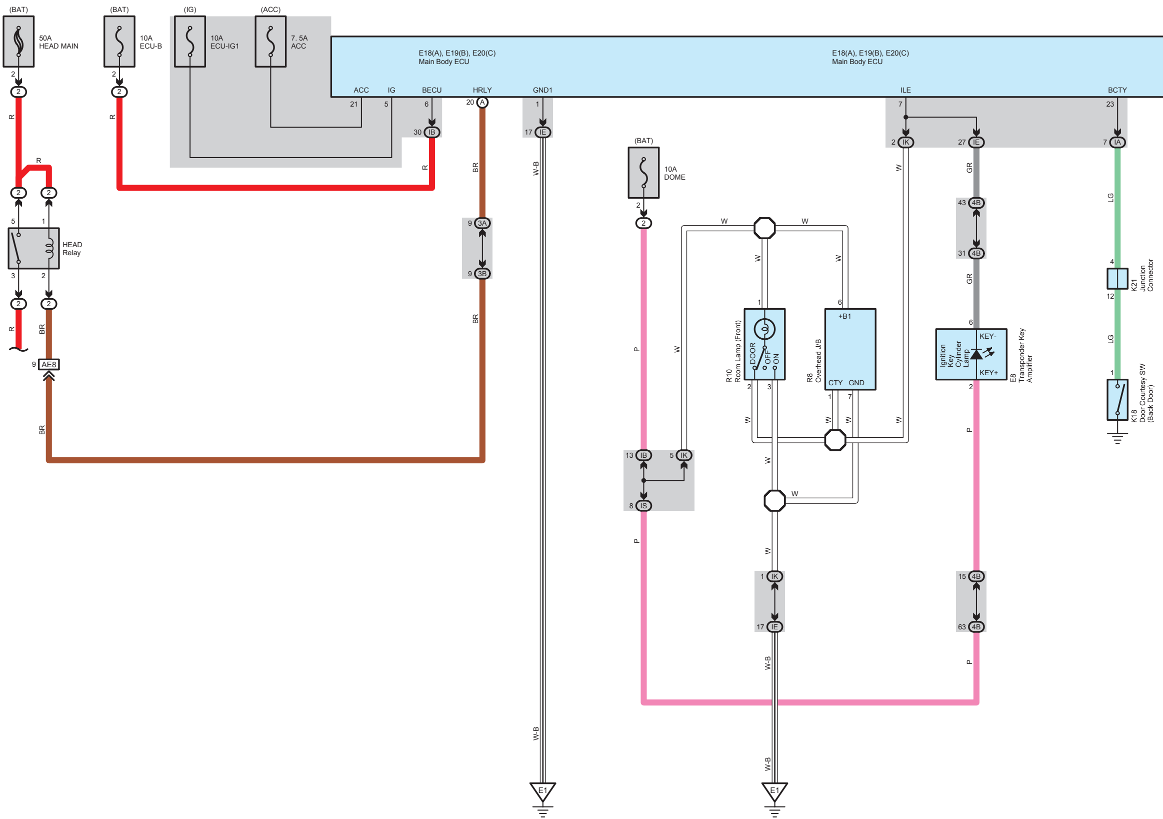
(BAT)
50A
HEAD MAIN
(BAT)
10A
ECU-B
(IG)
10A
ECU-IG1
(ACC)
7. 5A
ACC
E18(A), E19(B), E20(C)
Main Body ECU
E18(A), E19(B), E20(C)
Main Body ECU
ACC
IG
BECU
HRLY
GND1
ILE
BCTY
21
5
6
20
A
1
7
23
30
IB
17
IE
2
IK
27
IE
7
IA
R
R
R
BR
W-B
W
GR
LG
HEAD
Relay
5
1
3
2
BR
9
AE8
9
3A
9
3B
BR
(BAT)
10A
DOME
2
W
W
W
W
P
W
1
6
R10
Room Lamp (Front)
DOOR
OFF
ON
2
3
R8
Overhead J/B
+B1
CTY
GND
1
7
43
4B
31
4B
GR
6
KEY-
KEY+
Ignition
Key
Cylinder
Lamp
E8
Transponder Key
Amplifier
2
P
4
12
K21
Junction
Connector
LG
1
K18
Door Courtesy SW
(Back Door)
13
IB
5
IK
8
IS
P
W
1
IK
17
IE
W-B
15
4B
63
4B
P
W-B
E1
E1

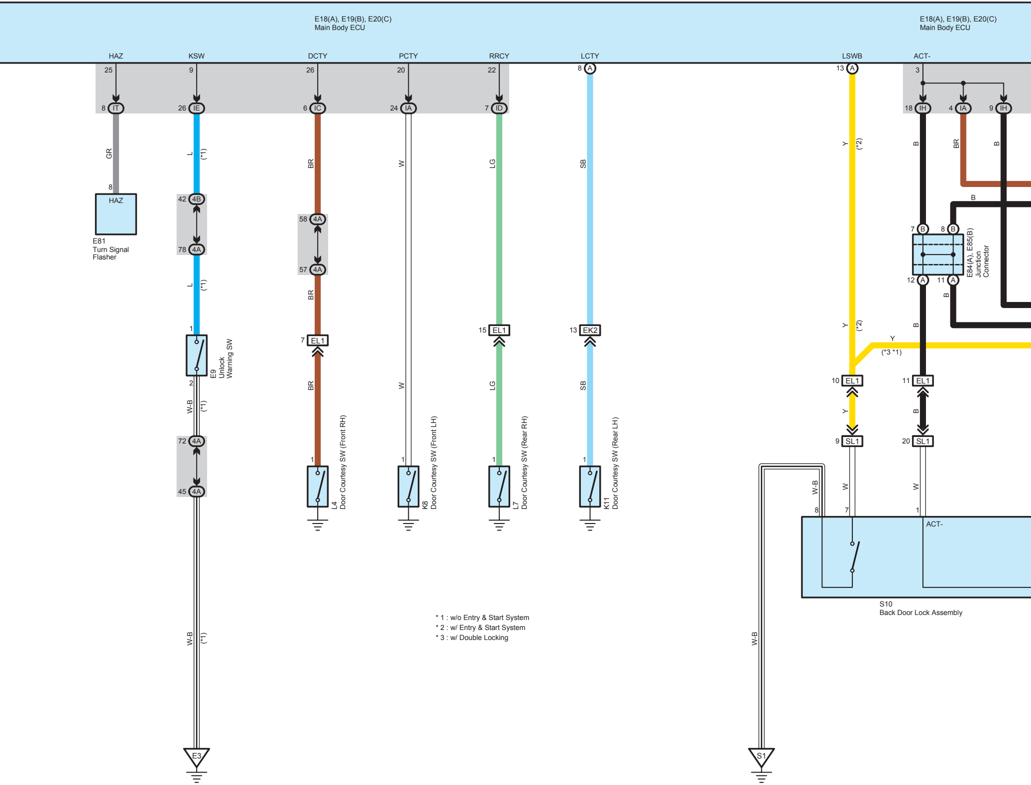
E18(A), E19(B), E20(C)
Main Body ECU
E18(A), E19(B), E20(C)
Main Body ECU
HAZ
KSW
DCTY
PCTY
RRCY
LCTY
LSWB
ACT-
25
9
26
20
22
8 A
13 A
3
8 IT
26 IE
6 IC
24 IA
7 ID
18 IH
4 IA
9 IH
GR
L (*1)
BR
W
LG
SB
Y (*2)
B
BR
B
8
HAZ
E81
Turn Signal
Flasher
42 4B
78 4A
58 4A
57 4A
L (*1)
BR
B
7 B
8 B
E84(A), E85(B)
Junction
Connector
12 A
11 A
B
B
Y (*2)
Y
(*3 *1)
1
E9
Unlock
Warning SW
2
W-B (*1)
7 EL1
15 EL1
13 EK2
10 EL1
11 EL1
BR
W
LG
SB
Y
B
9 SL1
20 SL1
72 4A
45 4A
1
1
1
1
L4
Door Courtesy SW (Front RH)
K8
Door Courtesy SW (Front LH)
L7
Door Courtesy SW (Rear RH)
K11
Door Courtesy SW (Rear LH)
W-B
W
W
8
7
1
ACT-
S10
Back Door Lock Assembly
W-B (*1)
W-B
E3
S1

* 1 : w/o Entry & Start System
* 2 : w/ Entry & Start System
* 3 : w/ Double Locking

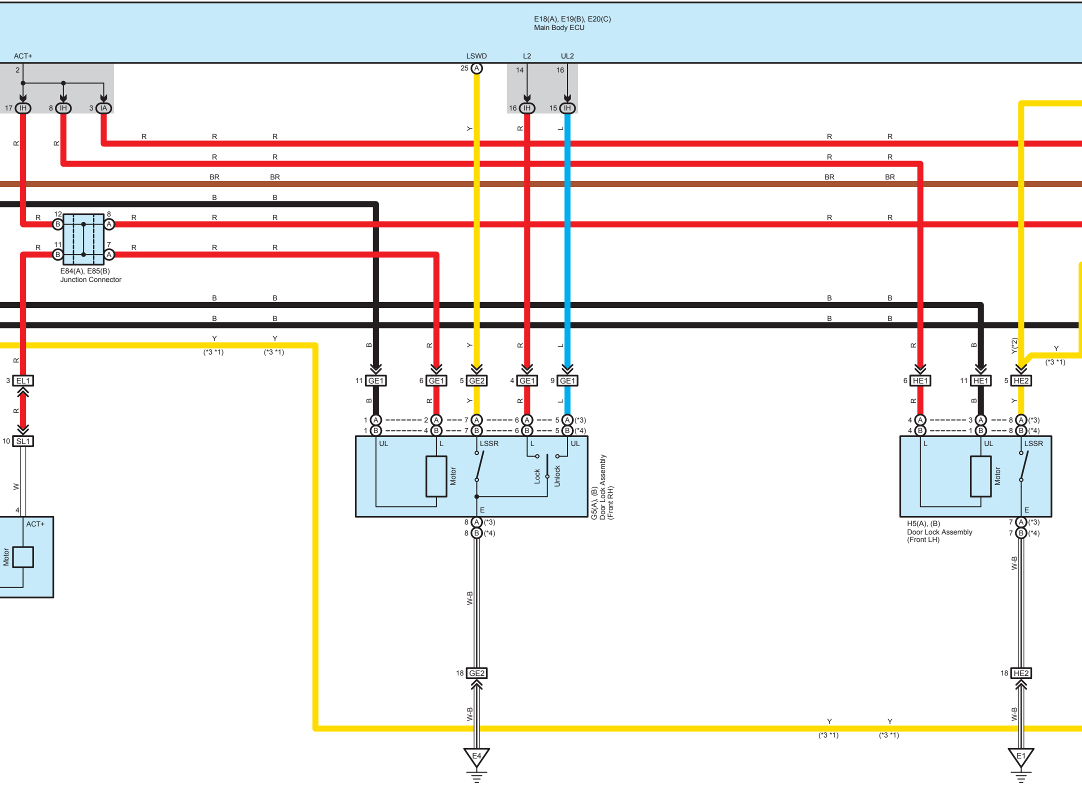
E18(A), E19(B), E20(C)
Main Body ECU
ACT+
LSWD
L2
UL2
2
25
A
14
16
17 IH
8 IH
3 IA
16 IH
15 IH
R
BR
B
Y
L
12
8
11
7
B
A
E84(A), E85(B)
Junction Connector
Y
(*3 *1)
Y(*2)
3 EL1
10 SL1
W
4
ACT+
Motor
11 GE1
6 GE1
5 GE2
4 GE1
9 GE1
6 HE1
11 HE1
5 HE2
(*3)
(*4)
UL
L
LSSR
Motor
Lock
Unlock
E
G5(A), (B)
Door Lock Assembly
(Front RH)
H5(A), (B)
Door Lock Assembly
(Front LH)
W-B
18 GE2
18 HE2
E4
E1

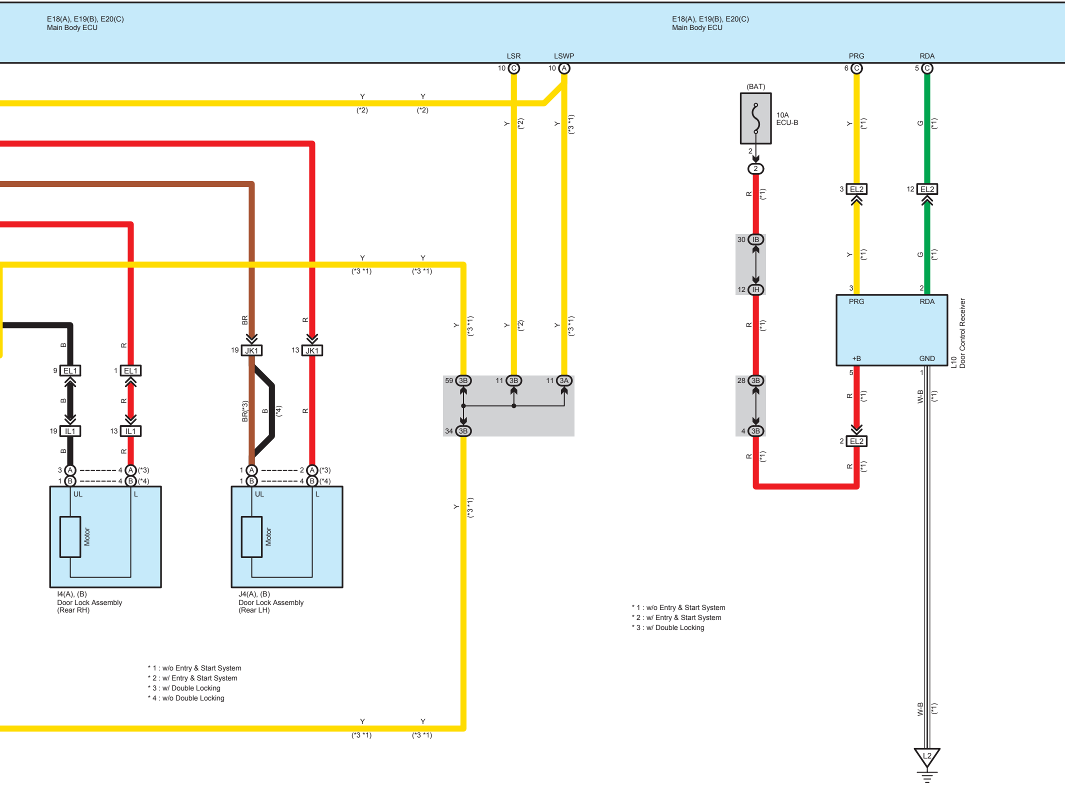
E18(A), E19(B), E20(C)
Main Body ECU
E18(A), E19(B), E20(C)
Main Body ECU
LSR
LSWP
PRG
RDA
10 C
10 A
6 C
5 C
Y (*2)
Y (*3 *1)
(BAT)
10A
ECU-B
2
R (*1)
30 IB
12 IH
28 3B
4 3B
3 EL2
12 EL2
2 EL2
G (*1)
PRG
RDA
+B
GND
L10
Door Control Receiver
W-B (*1)
L2
B
R
BR
BR(*3)
B (*4)
9 EL1
1 EL1
19 IL1
13 IL1
19 JK1
13 JK1
59 3B
11 3B
11 3A
34 3B
3 A
1 B
4 A (*3)
4 B (*4)
1 A
1 B
2 A (*3)
4 B (*4)
UL
L
Motor
I4(A), (B)
Door Lock Assembly
(Rear RH)
J4(A), (B)
Door Lock Assembly
(Rear LH)

* 1 : w/o Entry & Start System
* 2 : w/ Entry & Start System
* 3 : w/ Double Locking
* 4 : w/o Double Locking

* 1 : w/o Entry & Start System
* 2 : w/ Entry & Start System
* 3 : w/ Double Locking

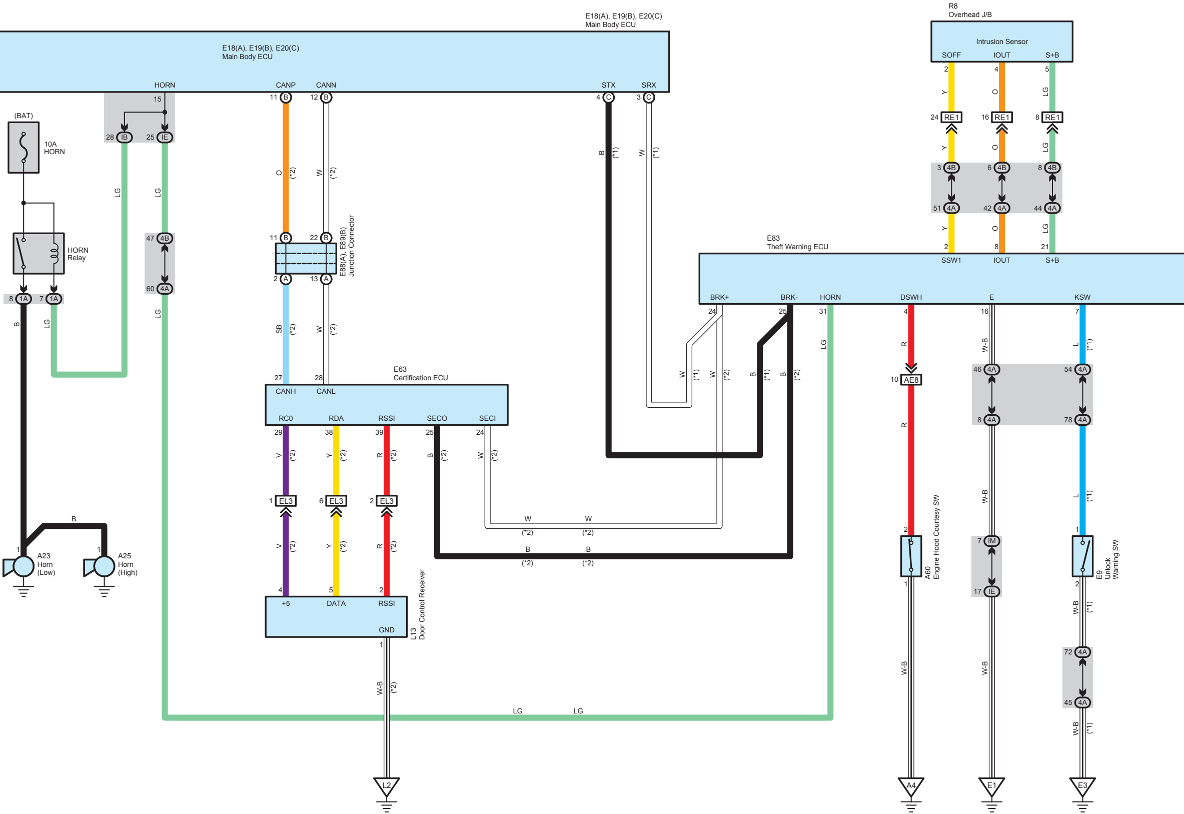
E18(A), E19(B), E20(C)
Main Body ECU
E18(A), E19(B), E20(C)
Main Body ECU
HORN
CANP
CANN
STX
SRX
R8
Overhead J/B
Intrusion Sensor
SOFF
IOUT
S+B
(BAT)
10A
HORN
HORN
Relay
E88(A), E89(B)
Junction Connector
E83
Theft Warning ECU
SSW1
IOUT
S+B
BRK+
BRK-
HORN
DSWH
E
KSW
E63
Certification ECU
CANH
CANL
RC0
RDA
RSSI
SECO
SECI
+5
DATA
RSSI
GND
L13
Door Control Receiver
A23
Horn
(Low)
A25
Horn
(High)
A60
Engine Hood Courtesy SW
E9
Unlock
Warning SW
RE1
EL3
AE8
IB
IE
IM
1A
4A
4B
L2
A4
E1
E3
LG
B
O
W
SB
V
Y
R
L
W-B
(*1)
(*2)

* 1 : w/o Entry & Start System
* 2 : w/ Entry & Start System
* 5 : Automatic A/C
* 6 : Manual A/C

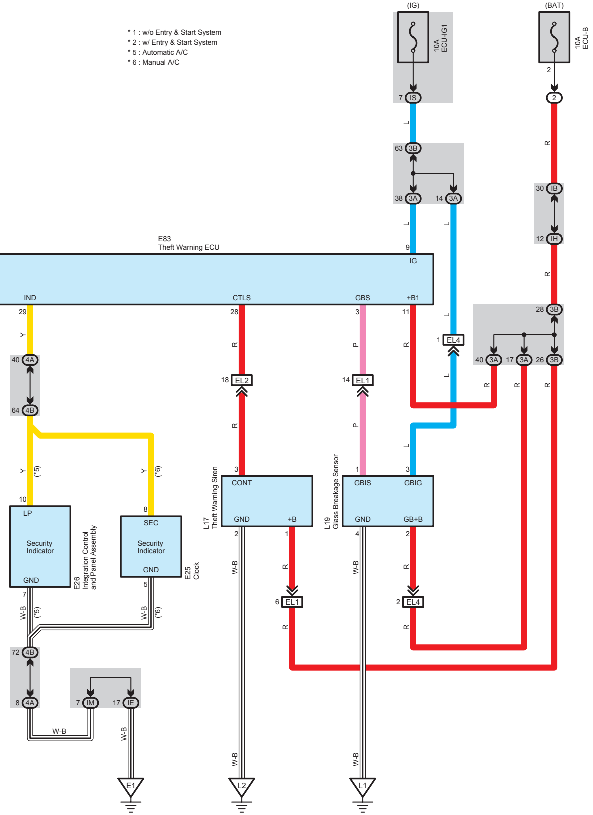

(IG)
10A ECU-IG1
(BAT)
10A ECU-B
7 IS
2
2
L
R
63 3B
38 3A
14 3A
30 IB
12 IH
E83
Theft Warning ECU
9
IG
IND
CTLS
GBS
+B1
29
28
3
11
Y
R
P
R
L
1 EL4
28 3B
40 3A
17 3A
26 3B
40 4A
64 4B
18 EL2
14 EL1
Y (*5)
Y (*6)
10
LP
Security Indicator
GND
E26
Integration Control and Panel Assembly
8
SEC
Security Indicator
GND
E25
Clock
3
CONT
GND
+B
L17
Theft Warning Siren
1
GBIS
GBIG
GND
GB+B
L19
Glass Breakage Sensor
7
5
2
1
4
2
W-B (*5)
W-B (*6)
W-B
6 EL1
2 EL4
72 4B
8 4A
7 IM
17 IE
W-B
E1
L2
L1