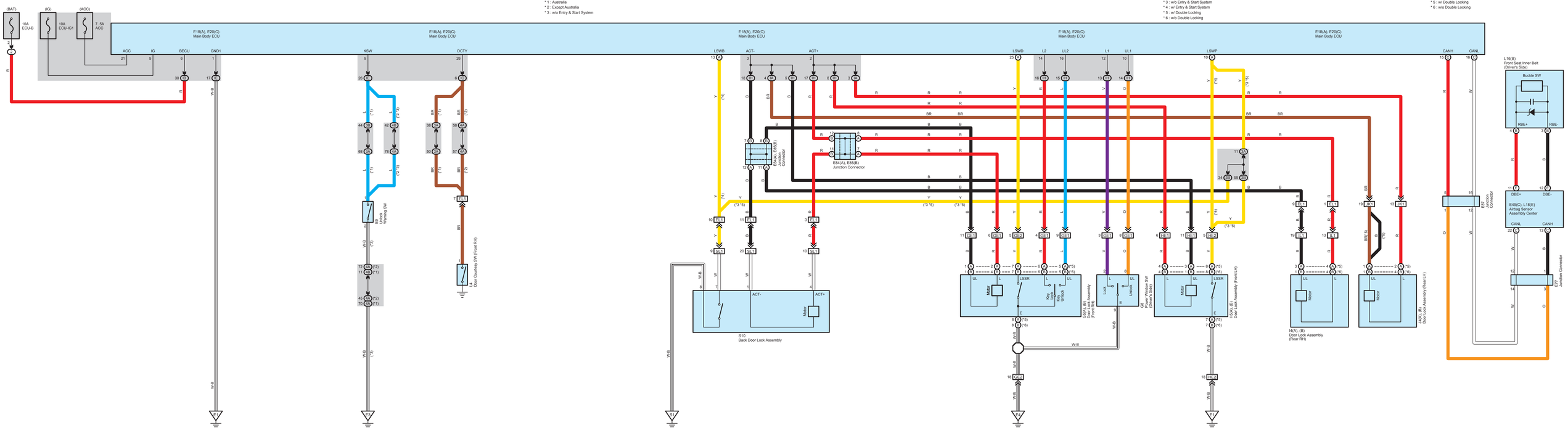
* 1 : Australia
* 2 : Except Australia
* 3 : w/o Entry & Start System
* 3 : w/o Entry & Start System
* 4 : w/ Entry & Start System
* 5 : w/ Double Locking
* 6 : w/o Double Locking
* 5 : w/ Double Locking
* 6 : w/o Double Locking
(BAT)
10A ECU-B
(IG)
10A ECU-IG1
(ACC)
7.5A ACC
E18(A), E20(C) Main Body ECU
ACC
IG
BECU
GND1
KSW
DCTY
LSWB
ACT-
ACT+
LSWD
L2
UL2
L1
UL1
LSWP
CANH
CANL
E84(A), E85(B) Junction Connector
E9 Lock Warning SW
Door Courtesy SW (Front RH)
S10 Back Door Lock Assembly
Motor
Key Lock
Key Unlock
LSSR
Lock
Unlock
Power Window SW (Driver's Door)
DSA(L,B) Door Lock Assembly (Front RH)
DP(L,B) Door Lock Assembly (Front LH)
HSA(L,B) Door Lock Assembly (Rear LH)
H4(A), (B) Door Lock Assembly (Rear RH)
L16(B) Front Seat Inner Belt (Driver's Side)
Buckle SW
RBE+
RBE-
E37 Junction Connector
E49(C), L18(E) Airbag Sensor Assembly Center
DBE+
DBE-
E27 Junction Connector